RAZZLE 1-Light Gold Flake Pendant

Model No. PF183-BLK/GF

RAZZLE Single Pendant in a Black finish with Gold Flake Glass shade

•Gold Flake Shade
•1 x 100W Med. base (Bulb not incl.)
•Shade Wd: 8 in., Ht: 12 in.
•Swivel and Extra Rods incl. (2x6 in., 2x12 in.)
•OAH-Max/Min: 49.5 in./14.5 in.
•Canopy Dia.: 4.75 in.
•10 ft. of wire

Collection: RAZZLE
Finish: Black

Your Details

Project:

Fixture Type/Qty.:

Location:

Contact info:

RAZZLE 1-Light Gold Flake Pendant

Model No. PF183-BLK/GF

Product Specifications

OAH (in.): 49.5
Overall Width (in.): 8.4
Depth (in.): 8.4
Extension (in.):
Bulb: A type E-26 Med. Base
Bulb wattage (watts): 100
Number of Bulbs: 1
Bulb included: No
LED info - Lumens (lm):
LED info - Watts (W):
LED info - lm/W:
LED info - CCT:
LED info - CRI:
Dimmable: Yes
Voltage: 120
Fixture Material: Steel
Shade Material: Steel
Certifications and Listings: cUL Listed
Net Weight (lb): 4.4
Net Weight (kg): 2.0
Warranty: 1 Year

RAZZLE 1-Light Gold Flake Pendant
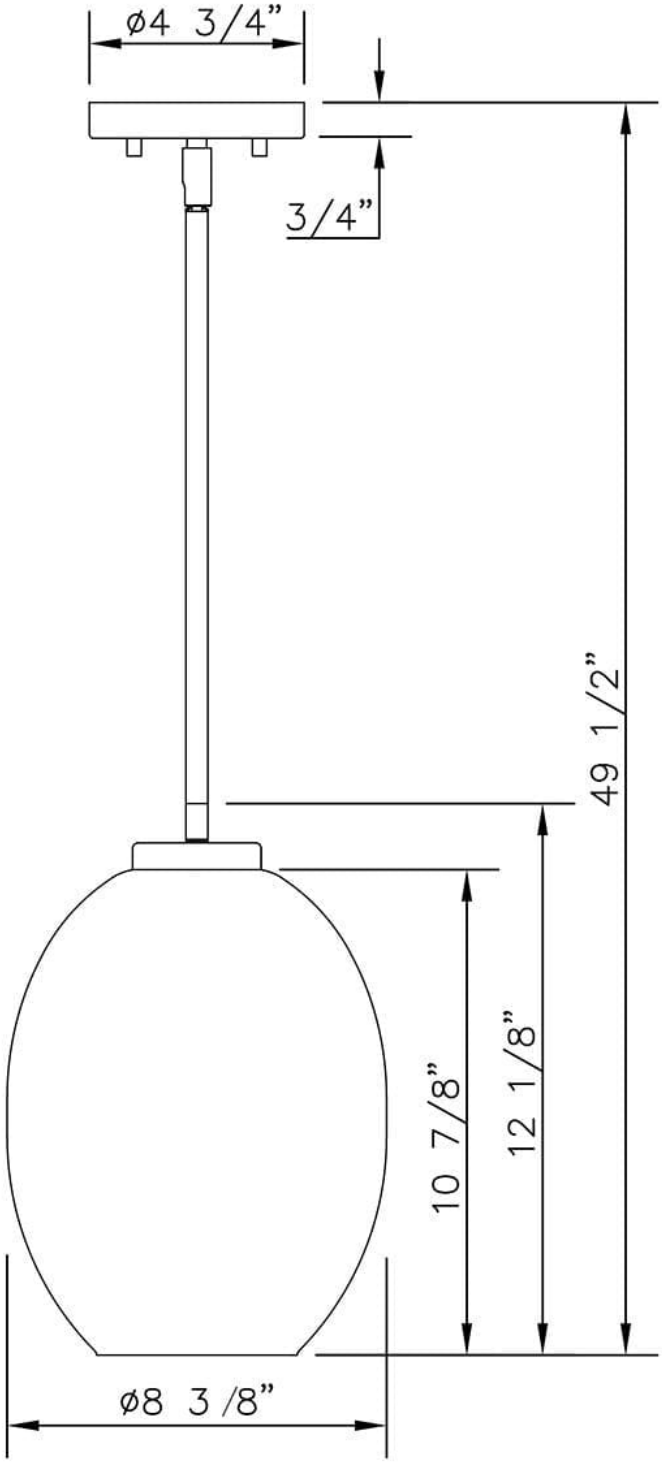
Model No. PF183-BLK/GF