Monopoint Track Accessory

Model No. TA011-BST

Monopoint in a Brushed Steel finish

- Monopoint allows single Track fixture to be mounted to any standard Electrical Box
- Compatible with all Kendal Line-Voltage Track fixtures
- Low profile
- ETL approval ensures both safety and quality

Type: Accessories, Monopoints
Finish: Brushed Steel, Nickel or Steel

Your Details

Project:

Fixture Type/Qty.:

Location:

Contact info:

Monopoint Track Accessory

Model No. TA011-BST

Product Specifications

OAH (in.): 0.75
Overall Width (in.): 4.5
OA Depth (in.): 4.5
Bulb:
Max. wattage (W):
Number of Bulbs:
Bulb included:
LED info - Watts (W):
LED info - Lumens (lm):
LED info - lm/W:
LED info - CCT:
LED info - CRI:

Dimmable: Yes
Voltage: 120V AC 60Hz
Certifications and Listings: ETL Listed
Warranty: 1 Year

Monopoint Track Accessory
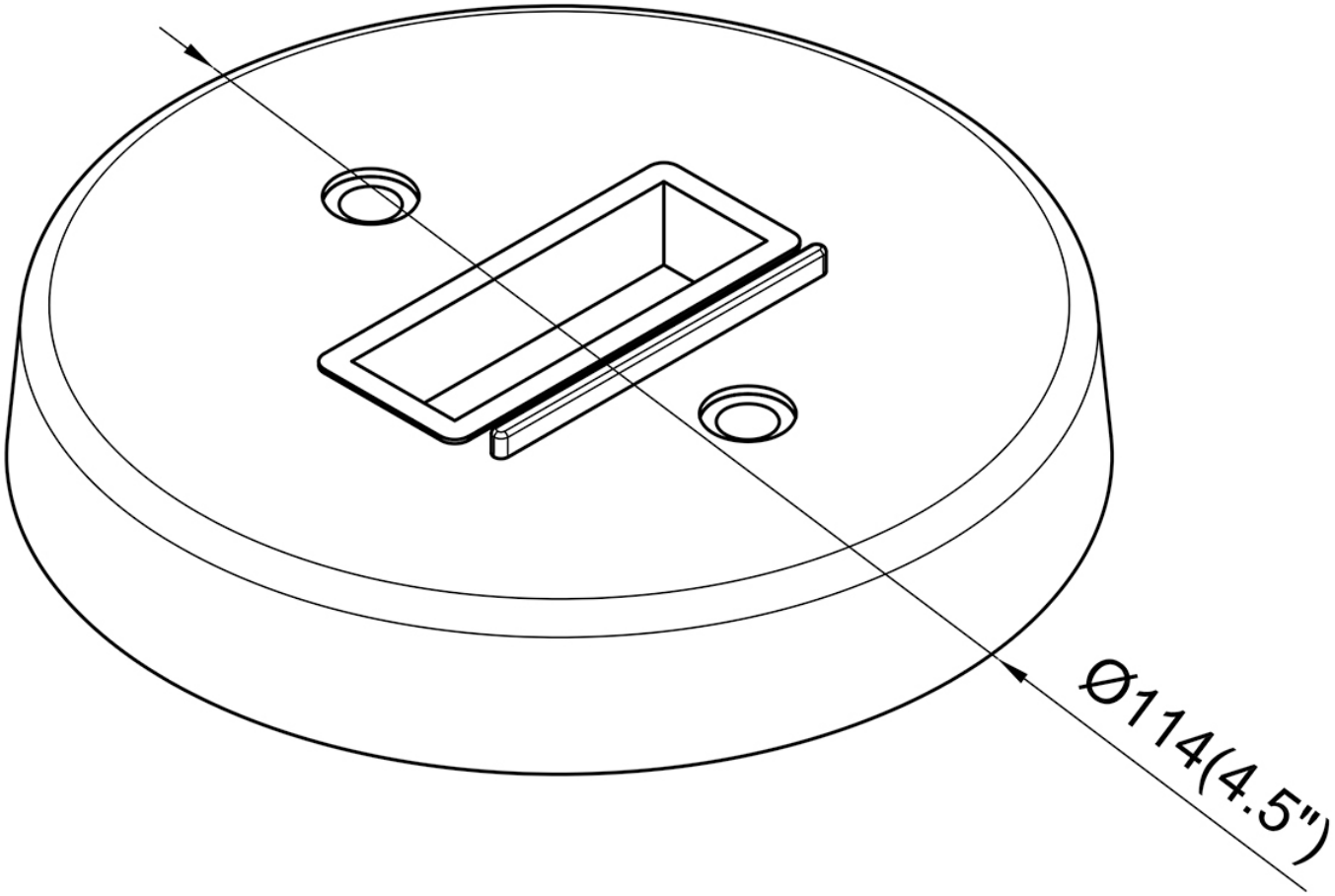
Model No. TA011-BST