# End Feed Track Accessory - Dual

Model No. TA006-DF-BLK

End Feed - Dual - in a Black finish

- Dual knock-outs enable Track Power feed from either the end or above with flexible conduit, BX, etc.
- Compatible with all Kendal linear Tracks
- Adds 6 inches to total length of Track once inserted
- 120V / 20 Amp rated
- ETL approval ensures both safety and quality

**Type:** Accessories, Power Feeds
**Finish:** Black

## Your Details

**Project:**

**Fixture Type/Qty.:**

**Location:**

**Contact info:**

# End Feed Track Accessory - Dual

Model No. TA006-DF-BLK

## Product Specifications

**OAH (in.):** 1.25
**Overall Width (in.):** 6
**OA Depth (in.):** 1.4
**Bulb:**
**Max. wattage (W):**
**Number of Bulbs:**
**Bulb included:**
**LED info - Watts (W):**
**LED info - Lumens (lm):**
**LED info - lm/W:**
**LED info - CCT:**
**LED info - CRI:**

**Dimmable:** Yes
**Voltage:** 120V AC 60Hz
**Certifications and Listings:** ETL Listed
**Warranty:** 1 Year

# End Feed Track Accessory - Dual
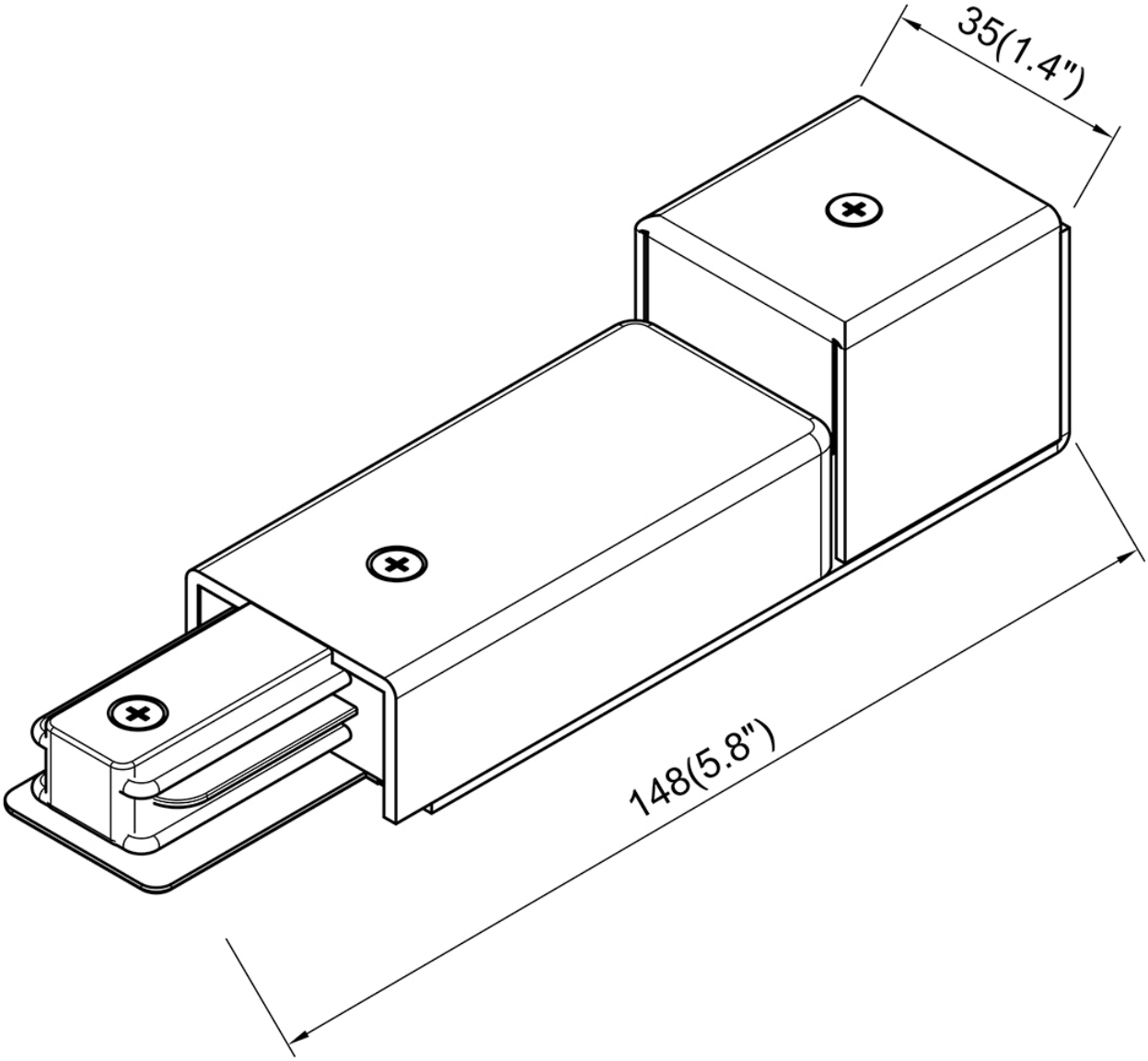
Model No. TA006-DF-BLK