AXIS 1-Light Satin Nickel & Black Pendant

Model No. PF110-SN/BLK

AXIS 1-Light Med. Base Pendant in a Satin Nickel & Black finish

•E26 / 60W max. (Bulb not incl. - LED compatible)
•OAW - 5.5 in.
•Pendant only Ht: 9 in.
•10 ft. of wire

Collection: AXIS
Finish:

Your Details

Project:

Fixture Type/Qty.:

Location:

Contact info:

AXIS 1-Light Satin Nickel & Black Pendant

Model No. PF110-SN/BLK

Product Specifications

OAH (in.): 130.7
Overall Width (in.): 5.5
Depth (in.): 5.5
Extension (in.):
Bulb: E26 (Med. Base)
Bulb wattage (watts): 60
Number of Bulbs: 1
Bulb included: No
LED info - Lumens (lm):
LED info - Watts (W):
LED info - lm/W:
LED info - CCT:
LED info - CRI:
Dimmable: Yes
Voltage: 120
Fixture Material:
Shade Material:
Certifications and Listings: ETL Listed
Net Weight (lb): 3.8
Net Weight (kg): 1.7
Warranty: 1 year

AXIS 1-Light Satin Nickel & Black Pendant
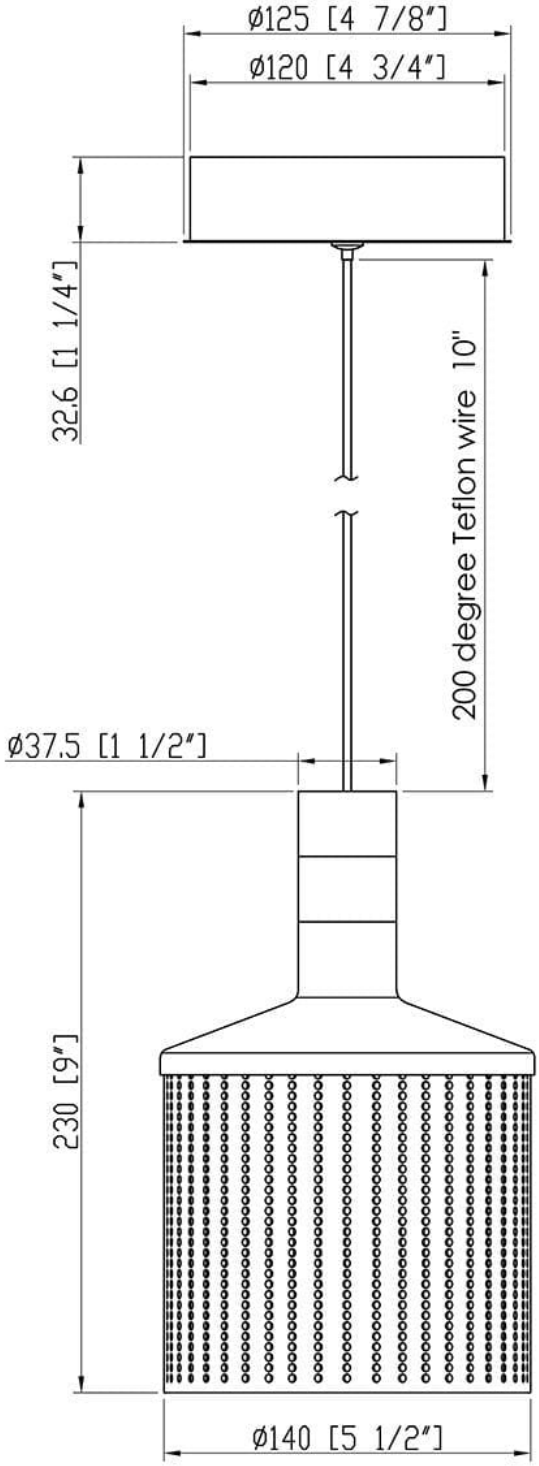
Model No. PF110-SN/BLK