SERPHUS Chrome LED Pendant Bar

Model No. PF9736-CH

SERPHUS LED Pendant Bar in a Chrome finish

•OAH: 75 in. (max.)
•OA Length: 36 in.
•Canopy L: 9 in. x W: 5 in. (at ceiling)
•Pendant only L: 36 in. x W: 7 in. x Ht: 1.6 in.
•Dimmable
•QAI Tested and Approved assuring both Safety and Quality
•5 year warranty

Collection: SERPHUS
Finish: Chrome

Your Details

Project:

Fixture Type/Qty.:

Location:

Contact info:

SERPHUS Chrome LED Pendant Bar

Model No. PF9736-CH

Product Specifications

OAH (in.): 75
Overall Width (in.): 36
Depth (in.): 7
Extension (in.):
Bulb: Integrated LED
Bulb wattage (watts):
Number of Bulbs:
Bulb included:
LED info - Lumens (lm): 1900
LED info - Watts (W): 38
LED info - lm/W: 50
LED info - CCT: 3000K
LED info - CRI: 82
Dimmable: Yes
Voltage: 120
Fixture Material:
Shade Material:
Certifications and Listings: QAI Certified
Net Weight (lb): 6.2
Net Weight (kg): 2.8
Warranty: 5 years

SERPHUS Chrome LED Pendant Bar

Model No. PF9736-CH
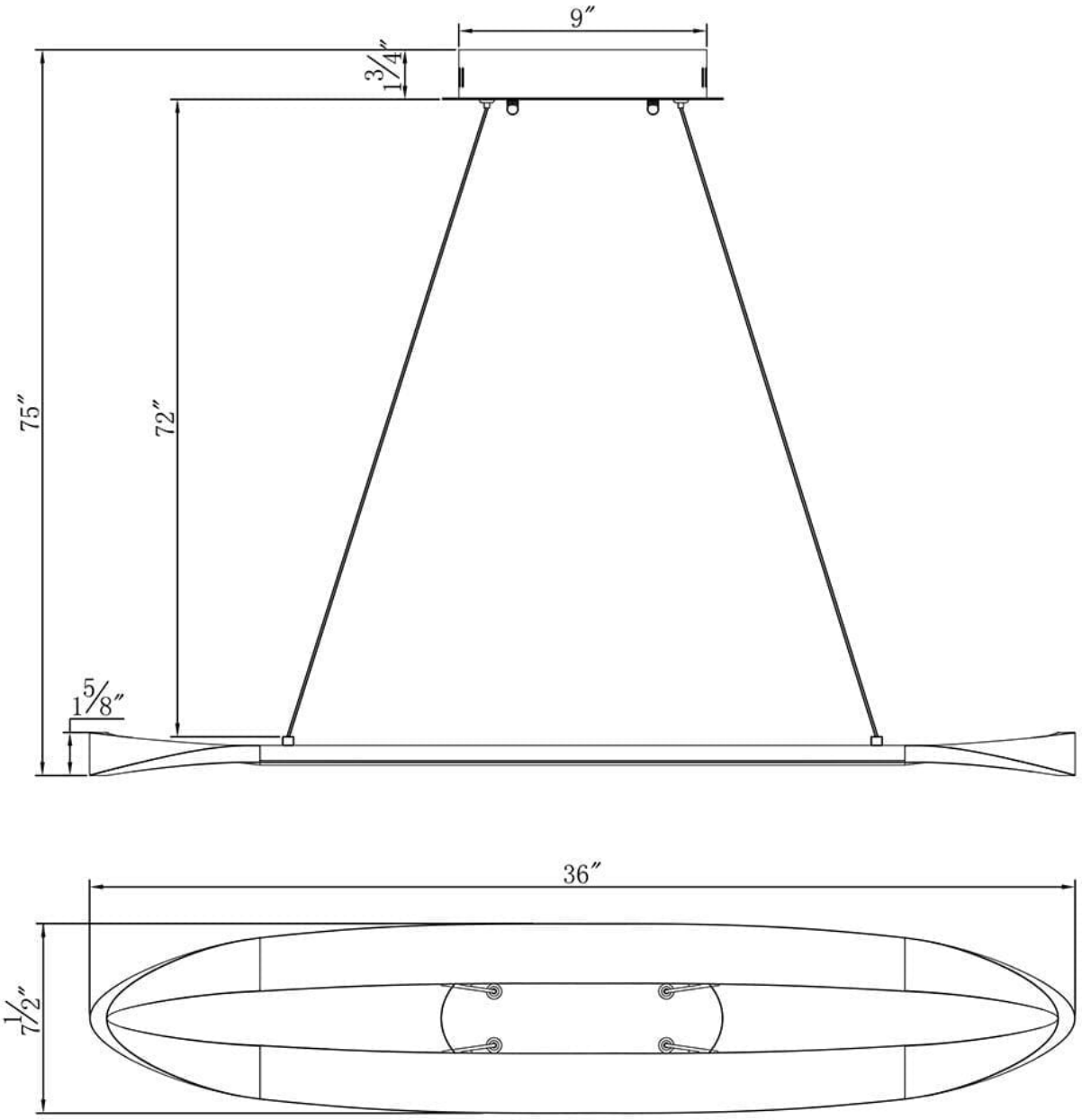
Size(inch): 36″*7 1/2″*1 5/8″-75″