PARAMOUNT 3-Light Satin Nickel Vanity Light with

Model No. VF2500-3L-SN

Paramount 3-light Bath & Vanity Light in a Satin Nickel finish with Curved Linen glass

•OA Width: 15"
•Bulb: 60W G9 frost - open fixture rated (not included)
•OA Height: 5" (backplate)
•Extension: 3.5" (ADA compliant)
•Can be mounted horizontally or vertically

Collection: PARAMOUNT
Finish: Satin Nickel

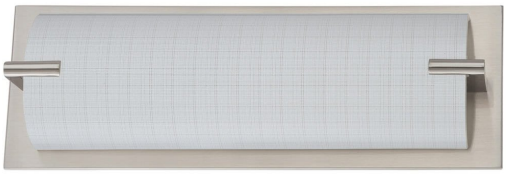

Your Details

Project:

Fixture Type/Qty.:

Location:

Contact info:

Product Specifications

OAH (in.): 5
Overall Width (in.): 15
Extension (in.): 3.5
Back Plate Ht. (in.):
Back Plate Wd. (in.):
Back Plate Depth (in.):
Bulb type: [116]
No. of Bulbs: 3
Bulb included: No
LED info - Watts (W):
LED info - Lumens (lm):
LED info - lm/W:
LED info - CCT:
LED info - CRI:
Dimmable: Yes

Voltage: 120
Fixture Material:
Shade Material:
Certifications and Listings: ETL Listed
ADA Compliant: Yes
Net Weight (lb): 4
Net Weight (kg): 1.8
Warranty: 1 year

PARAMOUNT 3-Light Satin Nickel Vanity Light with
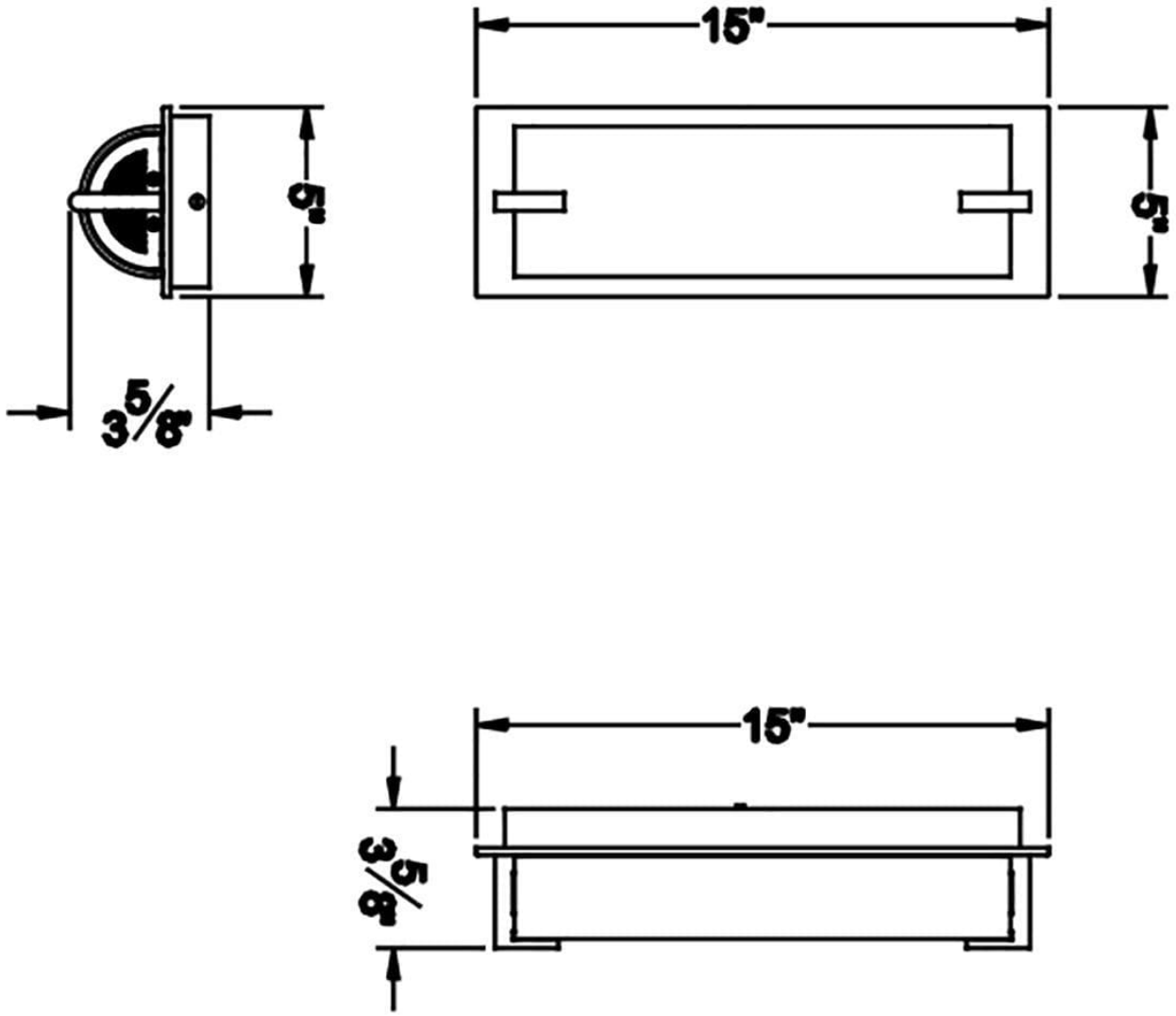
Model No. VF2500-3L-SN