OSLO Antique Brass Floor Lamp

Model No. FL4048-AB

OSLO Halogen Floor Lamp in an Antique Brass finish

•Bulb: 50W G9 (included)
•Control: On/Off toggle
•Multi-directional aiming capability
•Base diameter: 9"
•Stem Height: 41"
•Arm Length: 21"

Finish: Antique Brass, Brass or Bronze
Style: Floor

Your Details

Project:

Fixture Type/Qty.:

Location:

Contact info:

OSLO Antique Brass Floor Lamp

Model No. FL4048-AB

Product Specifications

OAH (in.): 53
Overall Width (in.): 9
Depth (in.): 24
Bulb type: 50W / G9
Bulb wattage (watts): 50
Number of Bulbs: 1
Bulb included: Yes
Control: On/off toggle
LED info - Watts (W):
LED info - Lumens (lm):
LED info - lm/W:
LED info - CCT:
LED info - CRI:
LED Reading Light info - Watts:
LED Reading Light info - lm:
LED Reading Light info - lm/W:
LED Reading Light info - CCT:
LED Reading Light info - CRI:
Net Weight (lb): 7.7
Net Weight (kg): 3.5
Certifications and Listings: ETL Listed
Warranty: 1 year

OSLO Antique Brass Floor Lamp
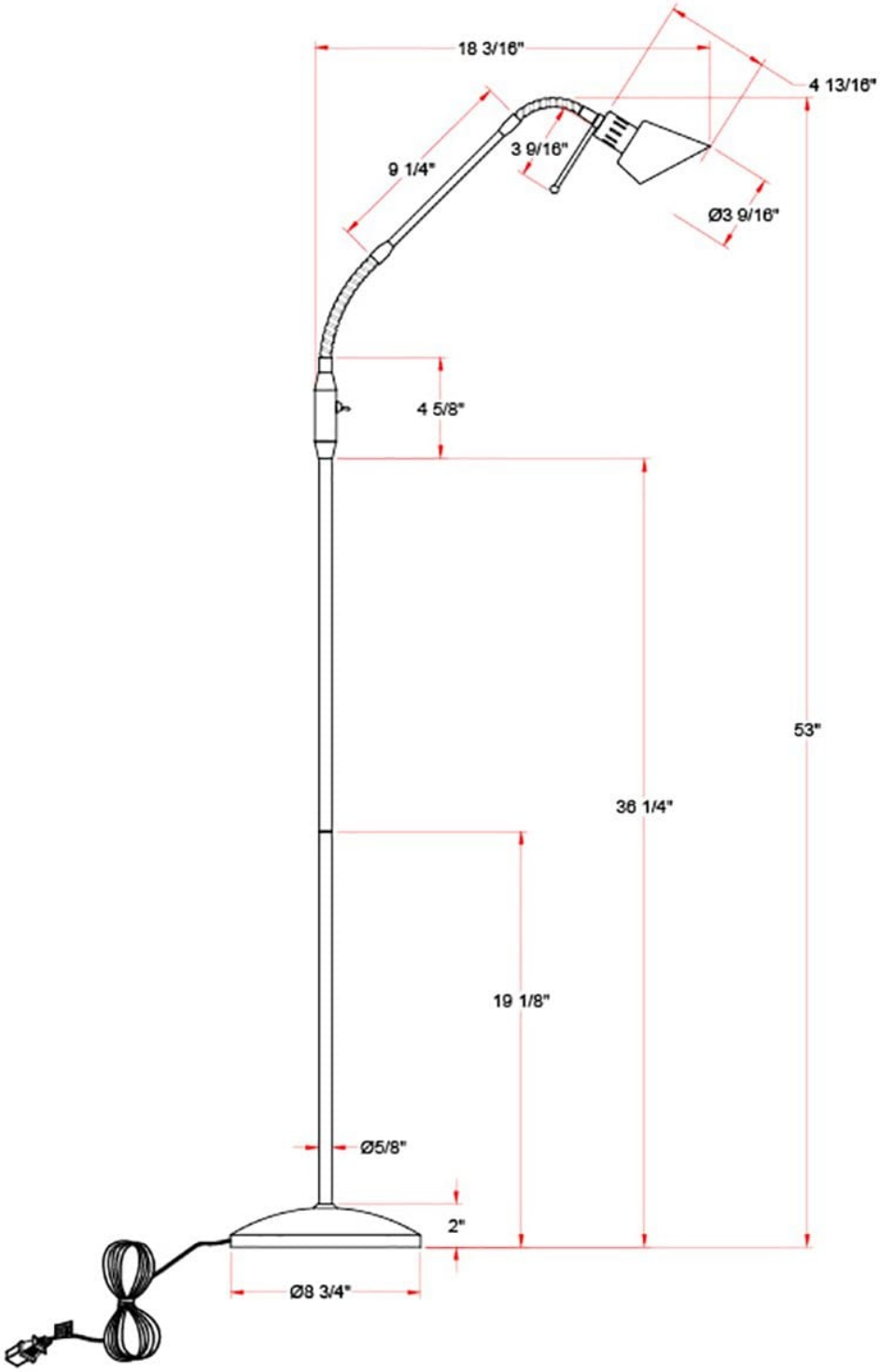
Model No. FL4048-AB