Integrated LED Track Cylinder

Model No. TLED-06-BLK

25 watt Integrated LED Track cylinder

- Directional light source providing 90° vertical aiming capability with 320° horizontal rotation
- Head length: 6.0”, Dia.: 3.5”
- OAH: 8.1” (max.)
- Cree XLamp COB LED
- Dimmer compatible (with TRIAC controls)
- 38° beam spread *
- *(24° and 60° lenses available. Model #’s: BSL467-24 and BSL467-60)
- Available Finishes: Black (BLK), Brushed Steel (BST), White (WH)
- 5 YEAR Warranty

Type: Cylinders, Integrated LED
Finish: Black

Your Details

Project:

Fixture Type/Qty.:

Location:

Contact info:

Integrated LED Track Cylinder

Model No. TLED-06-BLK

Product Specifications

OAH (in.): 8.1
Overall Width (in.): 3.5
OA Depth (in.): 6
Bulb: Integrated LED
Max. wattage (W):
Number of Bulbs:
Bulb included:
LED info - Watts (W): 25
LED info - Lumens (lm): 2630
LED info - lm/W: 105
LED info - CCT: 3000K
LED info - CRI: 83+

Dimmable: Yes
Voltage: 120V AC 60Hz
Certifications and Listings: ETL Listed
Warranty: 5 Years

Integrated LED Track Cylinder
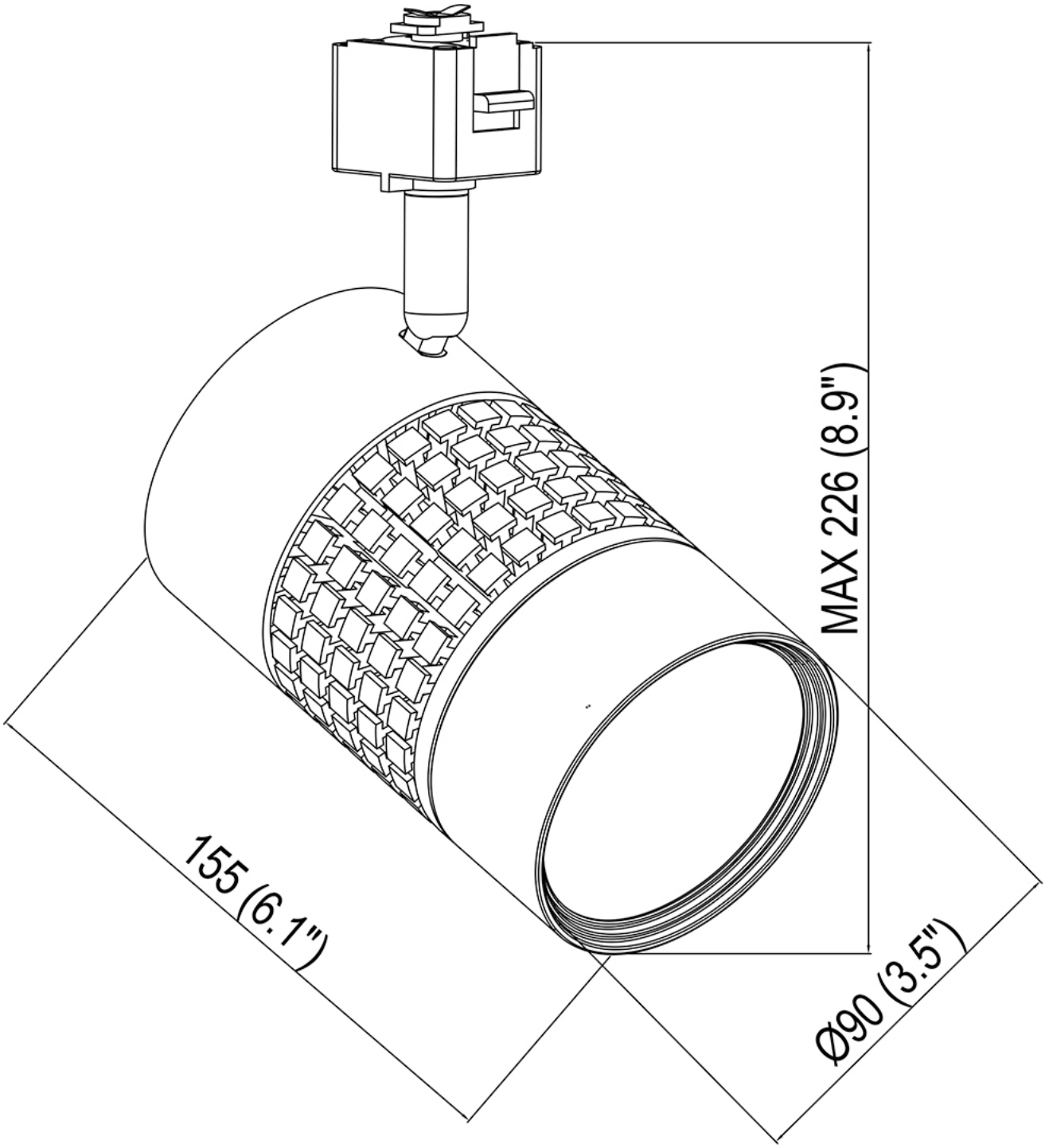
Model No. TLED-06-BLK