GU-10 Track Cylinder

Model No. TLGU-23-ORB

Line voltage track head cylinder in an Oil Rubbed Bronze finish for use with GU-10 base lamps

- Directional light source providing 140° vertical aiming capability with 350° horizontal rotation
- Lamp: GU-10 120V/50W (max.)
- Dimmer compatible
- Ceramic 120V AC GU-10 base socket
- Lead wires concealed within stem
- Re-lamps from the front with Suction cup lamp removal aid included
- OAH: 6" (max.)
- Head length: 4", Dia.: 2.5"
- LED compatible
- Available Finishes: Oil Rubbed Bronze (ORB), Satin Nickel (SN), White (WH)

Type: Cylinders
Finish: Oil Rubbed Bronze

Your Details

Project:

Fixture Type/Qty.:

Location:

Contact info:

GU-10 Track Cylinder

Model No. TLGU-23-ORB

Product Specifications

OAH (in.): 6
Overall Width (in.): 2.5
OA Depth (in.): 4
Bulb: GU-10
Max. wattage (W): 50
Number of Bulbs: 1
Bulb included: No
LED info - Watts (W):
LED info - Lumens (lm):
LED info - lm/W:
LED info - CCT:
LED info - CRI:

Dimmable: Yes
Voltage: 120V AC 60Hz
Certifications and Listings: ETL Listed
Warranty: 1 Year

GU-10 Track Cylinder
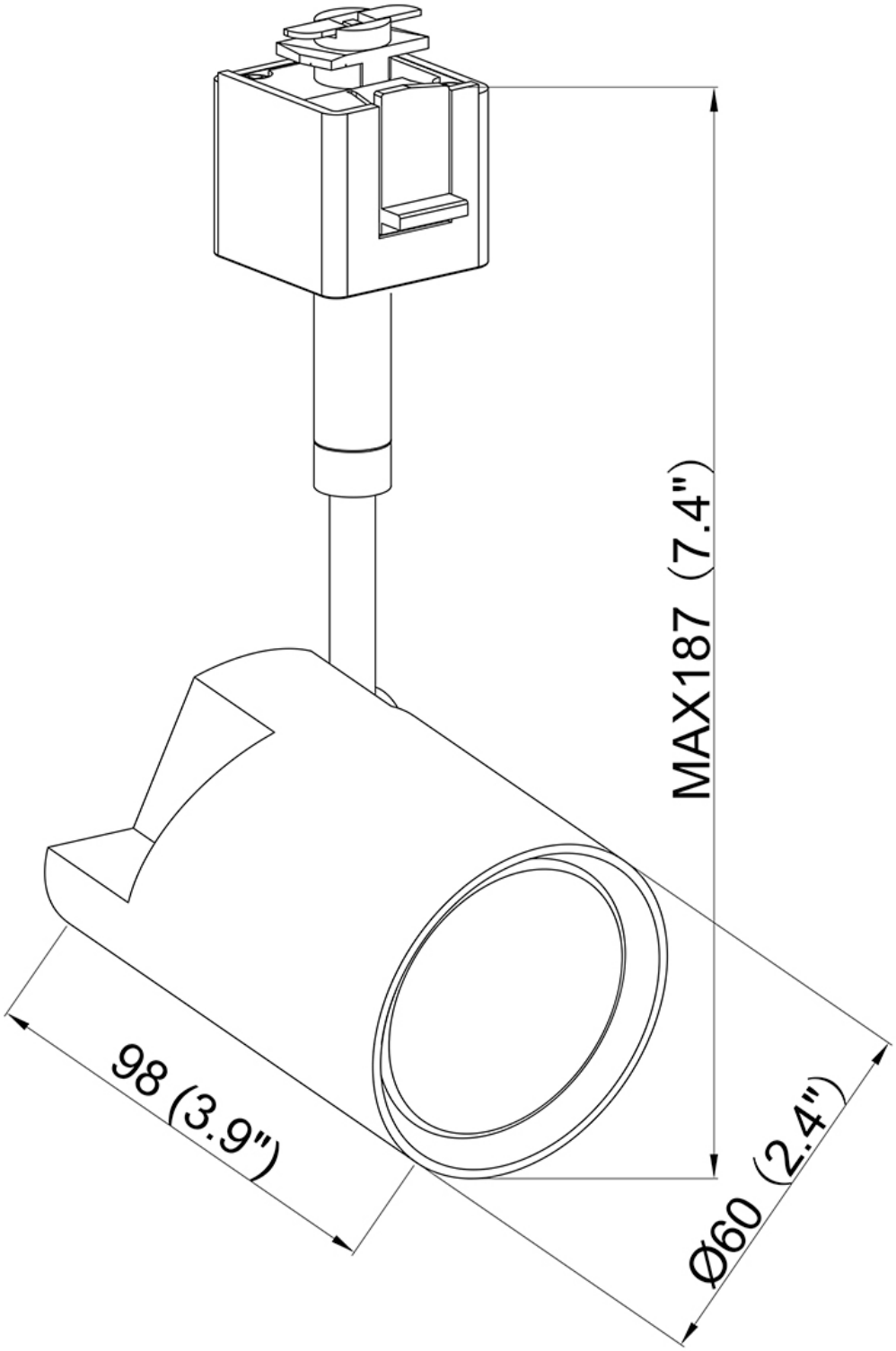
Model No. TLGU-23-ORB