Integrated LED Track Cylinder

Model No. TLED-45-SN

10 watt Integrated LED Track cylinder

•Head length: 3.25”, Dia.: 3”
•OAH: 6” (max.)
•Dimmable
•Beam Spread: 50 degrees

Type: Cylinders, Integrated LED
Finish: Nickel or Steel, Satin Nickel

Your Details

Project:

Fixture Type/Qty.:

Location:

Contact info:

Integrated LED Track Cylinder

Model No. TLED-45-SN

Product Specifications

OAH (in.): 6
Overall Width (in.): 3
OA Depth (in.): 3.25
Bulb: Integrated LED
Max. wattage (W):
Number of Bulbs:
Bulb included:
LED info - Watts (W): 10
LED info - Lumens (lm): 800
LED info - lm/W: 80
LED info - CCT: 3000K
LED info - CRI: 82+

Dimmable: Yes
Voltage: 120V AC 60Hz
Certifications and Listings: ETL Listed
Warranty: 3 Years

Integrated LED Track Cylinder
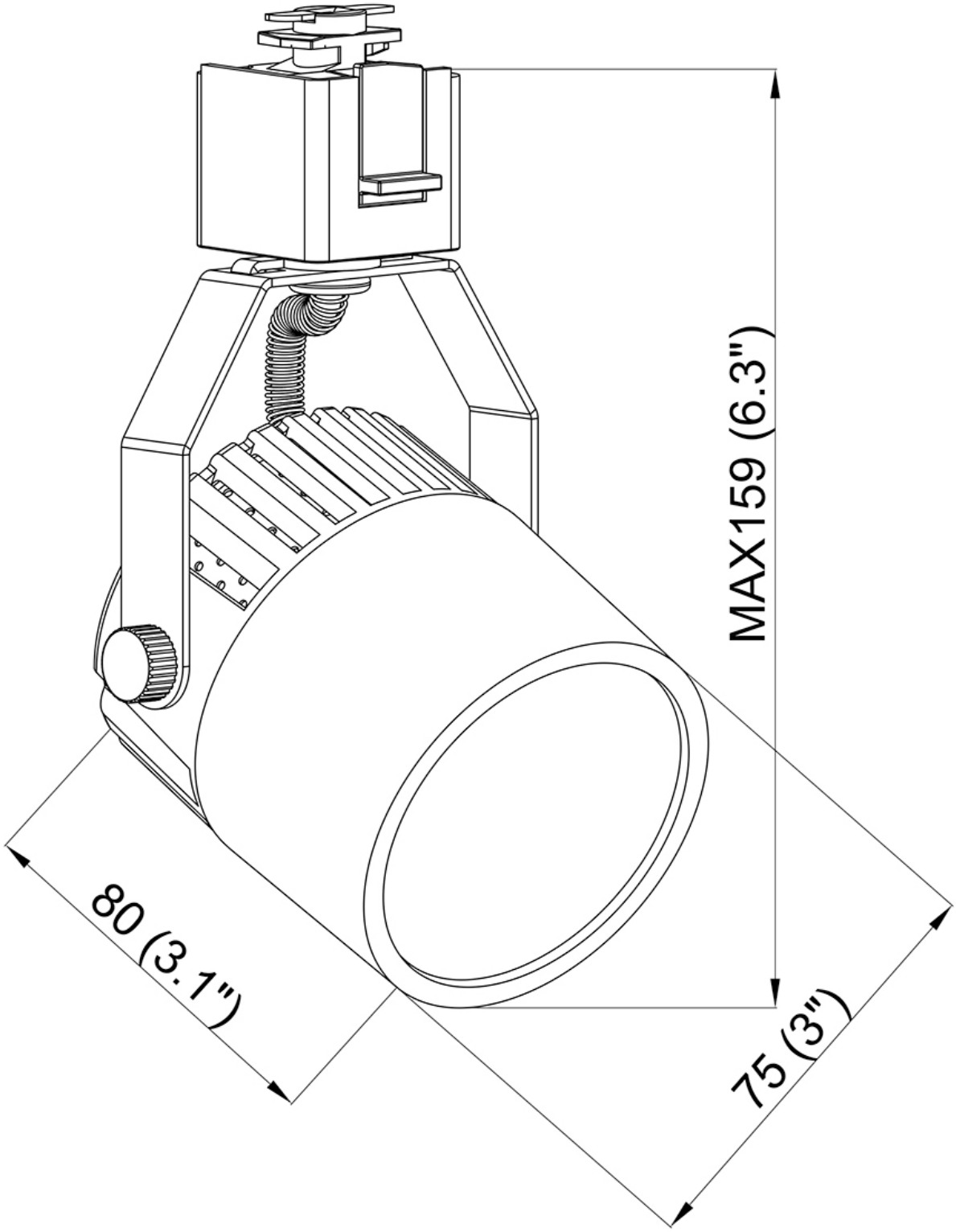
Model No. TLED-45-SN