ULTIMOR Black LED Pendant Bar

Model No. PF9636-BLK/CH

ULTIMOR LED Pendant Bar in a Black finish with Chrome end caps

•OAH: 86 in. (max.)
•OA Length: 35 in.
•Canopy L: 10.6 in. x W: 4.4 in. (at ceiling)
•Pendant only L: 35 in. x W: 9.25 in. x Ht: 5.5 in.
•Dimmable
•QAI Tested and Approved assuring both Safety and Quality
•5 year warranty

Collection: ULTIMOR
Finish: Black,Chrome

Your Details

Project:

Fixture Type/Qty.:

Location:

Contact info:

ULTIMOR Black LED Pendant Bar

Model No. PF9636-BLK/CH

Product Specifications

OAH (in.): 80
Overall Width (in.): 36
Depth (in.): 9.25
Extension (in.):
Bulb: Integrated LED
Bulb wattage (watts):
Number of Bulbs:
Bulb included:
LED info - Lumens (lm): 1500
LED info - Watts (W): 40
LED info - lm/W: 36
LED info - CCT: 3000K
LED info - CRI: 82
Dimmable: Yes
Voltage: 120
Fixture Material:
Shade Material:
Certifications and Listings: QAI Certified
Net Weight (lb): 16.5
Net Weight (kg): 7.5
Warranty: 5 years

ULTIMOR Black LED Pendant Bar
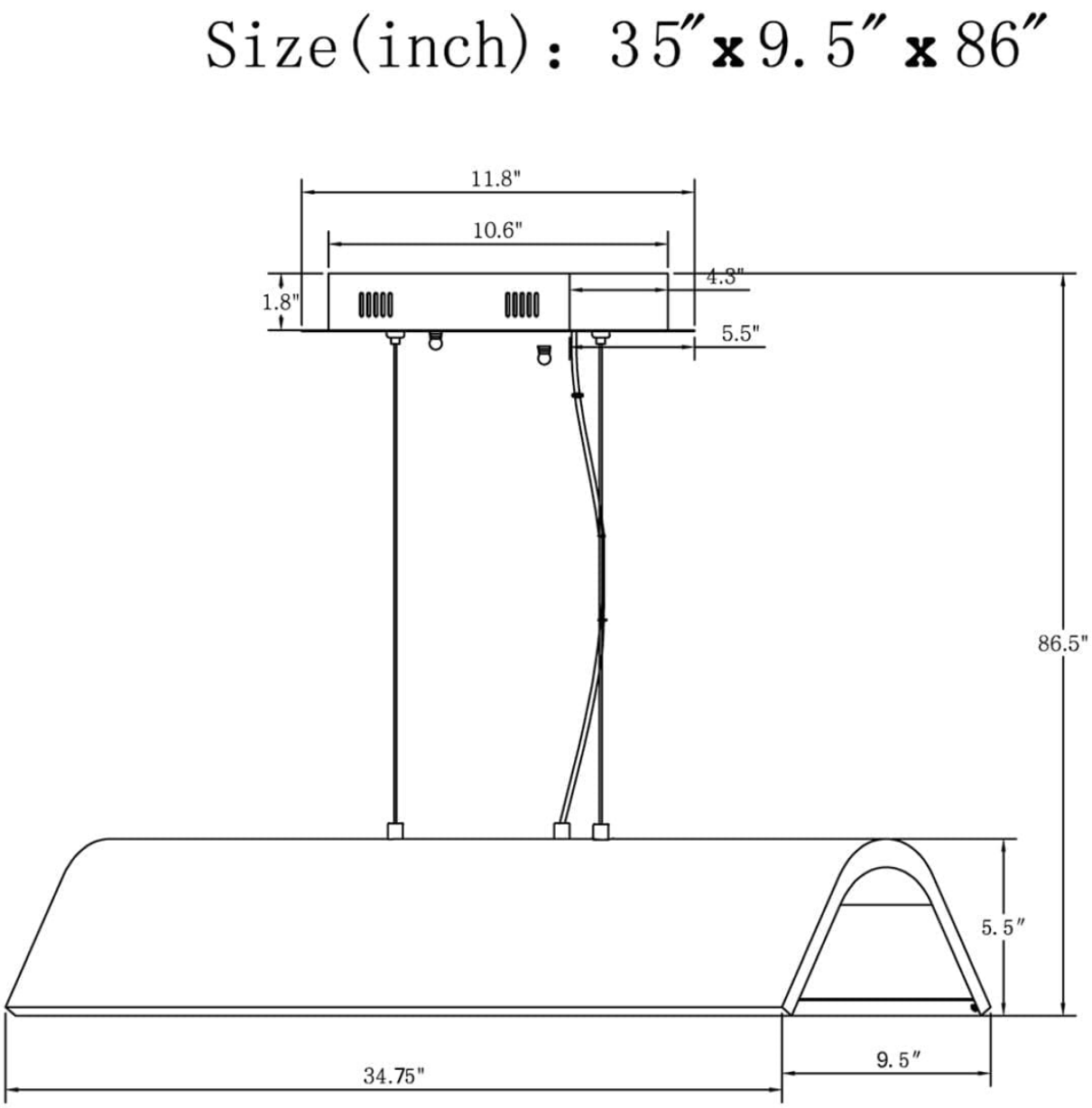
Model No. PF9636-BLK/CH