SATERN 24 in. Chrome LED Ring Pendant

Model No. PF8724-CH

SATERN 24" LED ringed pendant in a Chrome finish featuring optic crystal jewel insets

•OAH: 77 in. (max. - adjustable)
•OAW: 24 in.
•Dimmable
•5 year warranty

Collection: SATERN
Finish: Chrome

Your Details

Project:

Fixture Type/Qty.:

Location:

Contact info:

SATERN 24 in. Chrome LED Ring Pendant

Model No. PF8724-CH

Product Specifications

OAH (in.): 77
Overall Width (in.): 24
Depth (in.): 24
Extension (in.):
Bulb: Integrated LED
Bulb wattage (watts):
Number of Bulbs:
Bulb included:
LED info - Lumens (lm): 2000
LED info - Watts (W): 41
LED info - lm/W: 50
LED info - CCT: 3000K
LED info - CRI: 81+
Dimmable: Yes
Voltage: 120
Fixture Material:
Shade Material:
Certifications and Listings: QAI Certified
Net Weight (lb): 13.5
Net Weight (kg): 6.1
Warranty: 5 years

SATERN 24 in. Chrome LED Ring Pendant
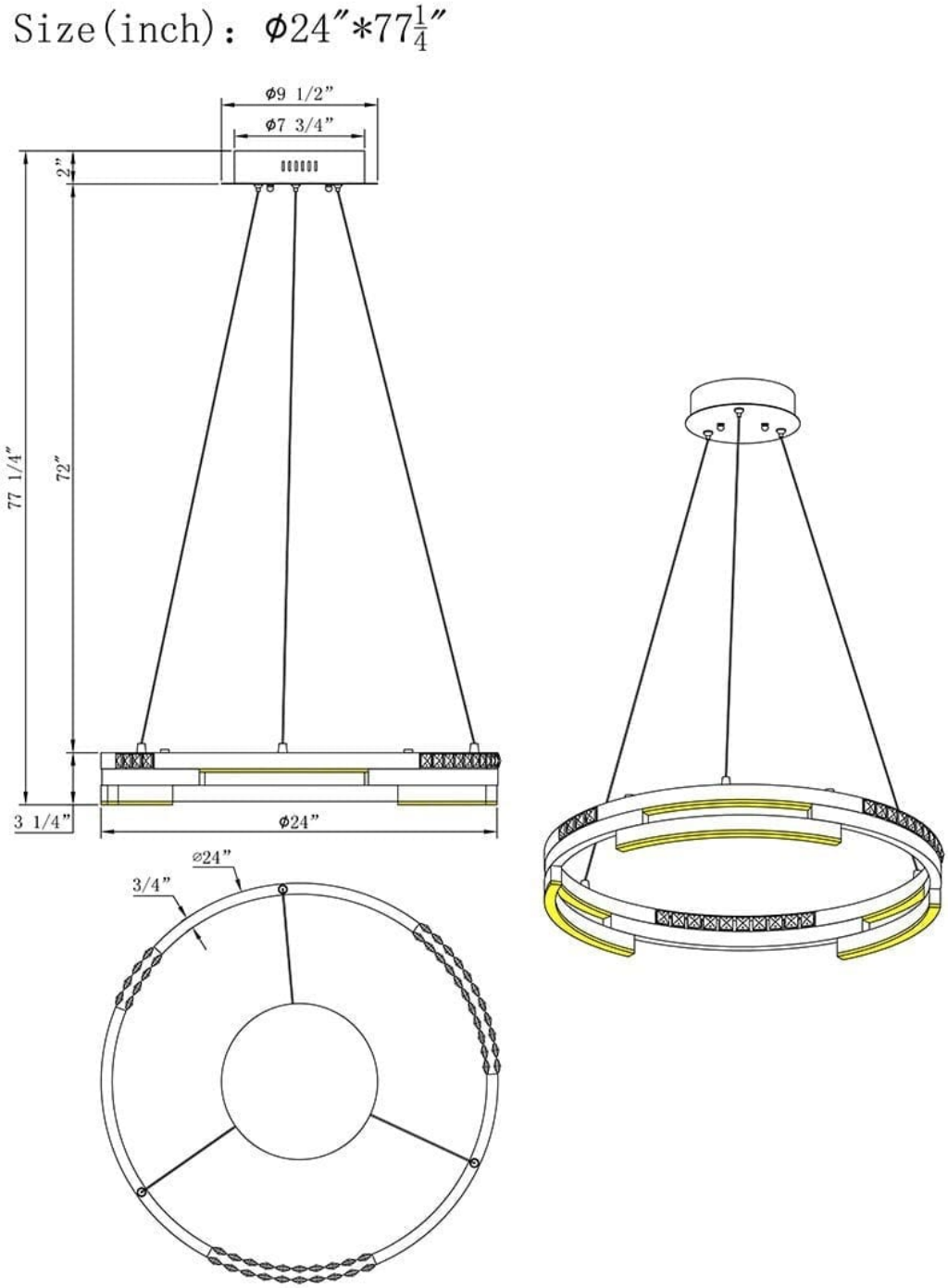
Model No. PF8724-CH