CANDELA 2-Light Chrome Vanity Light

Model No. VF3700-2L-CH

CANDELA 2-light Bath Sconce & Vanity Light in a Chrome finish with cylindrical White glass

•Bulb: 60W G9 frosted - open fixture rated (not included)
•Glass dia.: 2"
•Ht. - 10", Ext. - 3", Cover plate width - 4.5"

Collection: CANDELA
Finish: Chrome

Your Details

Project:

Fixture Type/Qty.:

Location:

Contact info:

CANDELA 2-Light Chrome Vanity Light

Model No. VF3700-2L-CH

Product Specifications

OAH (in.): 10
Overall Width (in.): 4.5
Extension (in.): 3
Back Plate Ht. (in.):
Back Plate Wd. (in.):
Back Plate Depth (in.):
Bulb type: [116]
No. of Bulbs: 2
Bulb included: No
LED info - Watts (W):
LED info - Lumens (lm):
LED info - lm/W:
LED info - CCT:
LED info - CRI:
Dimmable: Yes

Voltage: 120
Fixture Material:
Shade Material:
Certifications and Listings: ETL Listed
ADA Compliant: Yes
Net Weight (lb): 1.2
Net Weight (kg): 0.6
Warranty: 1 year

CANDELA 2-Light Chrome Vanity Light
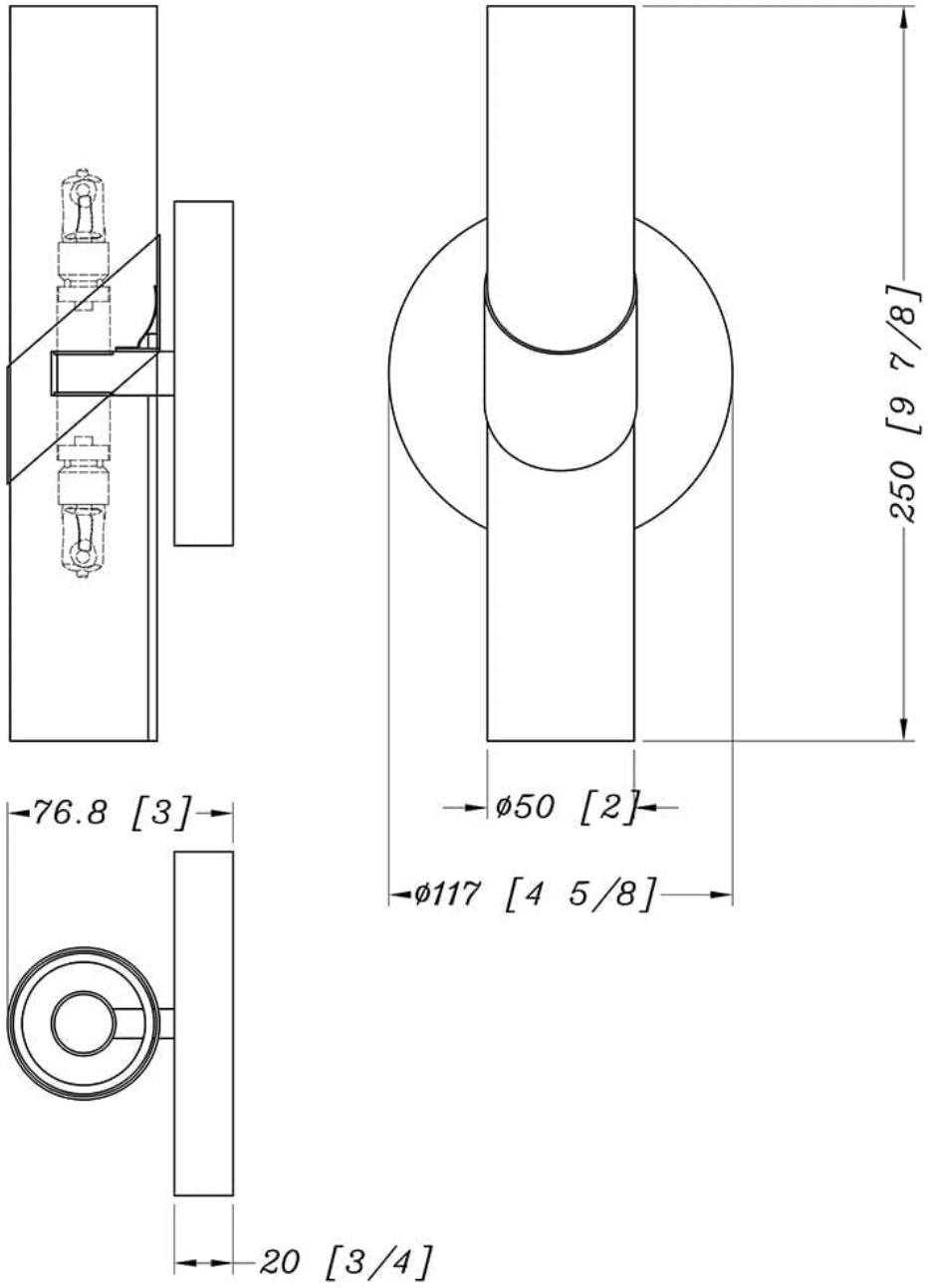
Model No. VF3700-2L-CH